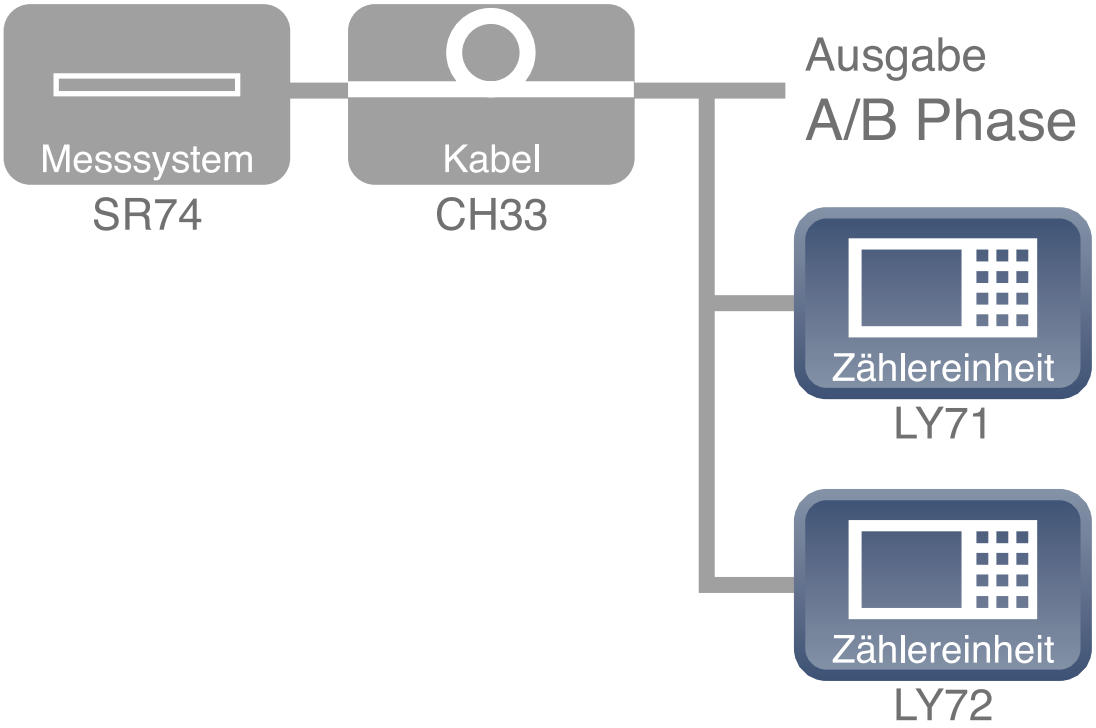

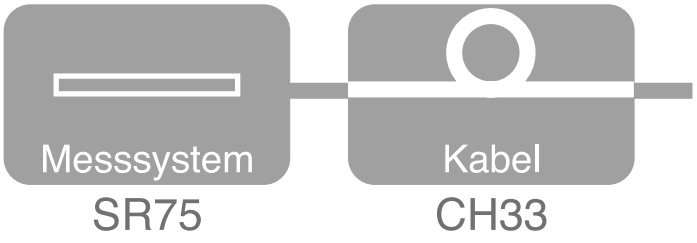

Protokoll

Mitsubishi Electric
Panasonic
YASKAWA