Absolute linear encoder

Slim type

SR27A

- Slim type allows installation in narrow spaces
- Magnetic system enables use even in environments with condensation, oil, and other adverse coditions
- Supports the communication protocol of each supporting manufacturer
- Same thermal expansion as iron

FANUC | Mitsubishi Electric | SIEMENS

Dimensions

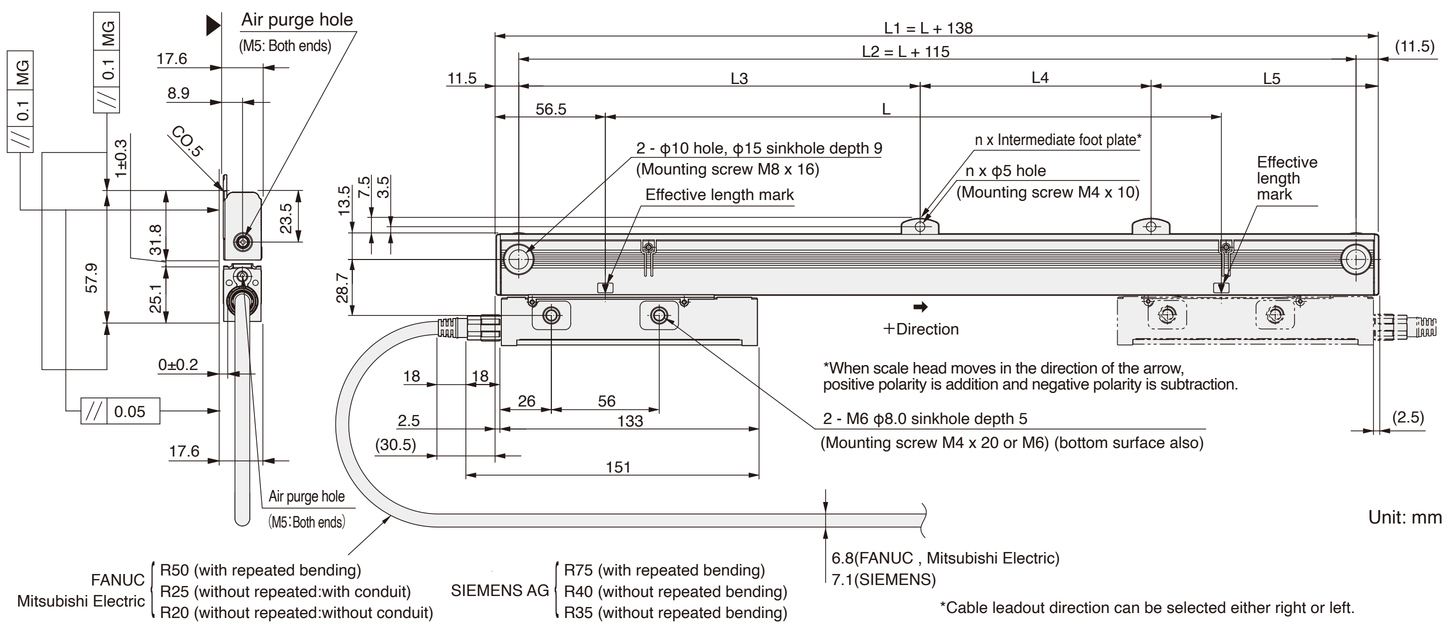

Unit: mm

*Cable leadout direction can be selected either right or left.

Effective length	Total length	Mounting pitch				Number of intermediate foot plates
L	L1	L2	L3	L4	L5	n
70	208	185	–	–	–	0
120	258	235	–	–	–	0
170	308	285	–	–	–	0
220	358	335	–	–	–	0
270	408	385	–	–	–	0
320	458	435	–	–	–	0
370	508	485	–	–	–	0
420	558	535	–	–	–	0
470	608	585	–	–	–	0
520	658	635	–	–	–	0
570	708	685	–	–	–	0
620	758	735	–	–	–	0
670	808	785	392.5	–	392.5	1
720	858	835	417.5	–	417.5	1

Effective length	Total length	Mounting pitch				Number of intermediate foot plates
L	L1	L2	L3	L4	L5	n
770	908	885	442.5	–	442.5	1
820	958	935	467.5	–	467.5	1
920	1,058	1,035	517.5	–	517.5	1
1,020	1,158	1,135	567.5	–	567.5	1
1,140	1,278	1,255	627.5	–	627.5	1
1,240	1,378	1,355	677.5	–	677.5	1
1,340	1,478	1,455	727.5	–	727.5	1
1,440	1,578	1,555	520	520	515	2
1,540	1,678	1,655	550	550	555	2
1,640	1,778	1,755	585	585	585	2
1,740	1,878	1,855	620	620	615	2
1,840	1,978	1,955	650	650	655	2
2,040	2,178	2,155	720	720	715	2

Unit: mm

MG: Machine guide * Intermediate foot plate: One location when L ≥ 670 mm, two locations when L ≥ 1440 mm

Notes
- The surface indicated by the ▲ marks is the installation surface.
- Screws indicated in the diagram are supplied as standard accessories.
- Movement outside the effective length (L) will damage the scale head. It is recommended that the mechanical movable length (stroke) be set to 10 mm or more to the inside of both ends of the effective length (L).

Specifications

Model name	SR27A - ×××○□AX	SR27A - ×××○□BX SR27A - ×××○□DX	SR27A - ×××○AZY
Effective length (L: mm)	70 - 2,040		
Thermal expansion coefficient	12±1 × 10^{-6} /°C		
Accuracy(at 20°C)	(3+3L/1,000) µmp-p or (5+5L/1,000) µmp-p, L: Effective length (mm)		
Reference point	Center, or user-selected position (Set at factory shipping)	Fixed to center	Fixed to 10 mm from left end of effective length
Output signal	Absolute serial bidirectional signal, compliant with EIA-485		Compliant with DRIVE-CLiQ
Compatible controllers	FANUC α/αi interface compatible	Mitsubishi Electric	SIEMENS AG
Resolution	Selectable from 0.005*, 0.01, 0.05, 0.1, 0.5 and 1 µm (Factory set)	Selectable from 0.005*, 0.01, 0.05 and 0.1 µm (Factory set)	0.01µm (Factory set)
Maximum response speed	200 m/min		
Functional safety	—		IEC 61508, EN/BS 62061 SIL 2 EN/BS/ISO 13849-1 Cat. 3 / PL d EN/BS 61800-5-2
Product Safety	FCC Part15 Subpart B Class A ICES-003 Class A Digital Device EN/BS 61000-6-2, EN/BS 61000-6-4		
Product Environment	EN/BS 63000		
Operating temperature range	0 to +50°C		
Storage temperature range	-20 to +55°C		
Vibration resistance	150 m/s² (50 Hz to 3,000 Hz)		
Impact resistance	350 m/s² (11 ms)		
Protective design grade	IP54 (Air purge not included), IP65 (Air purge included)		
Power supply voltage range	DC+4.75 to +5.25 V		DC+17 to +30.8 V
Maximum power consumption	1.3W or less (4.75V or 5.25V)		1.75W or less (17V) 1.9W or less (30.8V)
Consumption current	250mA (5V) (when the controller is connected)		75mA (24V) (when the controller is connected)
Mass	Approx. 0.39kg+ 1.53kg/m or less		
Compatible cables (types without relay connectors) Maximum cable length	CH23A-***NVF 13 m	CH23-***NVM 13 m	CH22-***NSMY 30 m
Compatible cables (types with relay connectors) Maximum cable length	CH23A-***NVK + CH23A-***NPFA 30 m	CH23-***NVK + CH23-***NPMA 30 m	CH22-***NSMF + CH22-*** NSFY 30 m

*For resolution of 0.005µm, please contact our sales department. *Magnescale reserves the right to change product specifications without prior notice.

Details of model designation

Scale

SR27A - ×××○□△#

[×××]Effective length (cm)

[○]Accuracy grade

Type	Accuracy grade
A	(5+5L/1,000)µmp-p
S	(3+3L/1,000)µmp-p

L: Effective length(mm)

[□]Resolution and direction (µm)

Type	Direction	Resolution	Type	Direction	Resolution
S		0.005	T		0.005
A		0.01	F		0.01
B	+	0.05	G	–	0.05
C		0.1	H		0.1
D		0.5	J		0.5
E		1	K		1

SIEMENS AG: S, A
Mitsubishi Electric: S, A, B, C
FANUC: S, A, B, C, D, E, T, F, G, H, J, K

[△]Communication protocol

Type	NC manufacturer	Remarks
A	FANUC	α/αi interface
B	Mitsubishi Electric	2-wire
D	Mitsubishi Electric	4-wire
Z	SIEMENS AG	DRIVE-CLiQ

[#]Reference point position

Type	Reference point position
X	Center
Y	Fixed to 10mm from left end of effective length

SIEMENS AG: Y only
Mitsubishi Electric: X only
* Please consult our representative separately for arbitrary positions.

Cables

CH22 - □□□○▽※#

[□□□]Cable length
Written by flush right, indication in "m" units, up to 30 m, 0.5 m pitch
(Example)

Type	Cable length
015	1.5m
070	7m
260	26m

[○]Conduit specification

Type	Conduit specification
C	With conduit
N	Without conduit (standard)

[▽]Cable seath (covering)

Type	Cable specification
S	PU (Polyurethane, Siemens Motion connect 800+)

[※]Scale side connector

Type	Specification	Remarks
M	Scale head connector	Standard
F	M12 connector (Female) made by Phoenix Contact	Relay/ Waterproofing
E	M12 connector (Female) with panel mount relay made by Phoenix Contact	Relay/ Waterproofing/ Attatched connector

[#]Controller side connector

Type	Specification	Remarks
None	Open-end	
Y	RJ45 connector made by YAMAICHI ELECTRONICS	Adopts NC machine tool
Z	RJ45 connector (water proof) made by YAMAICHI ELECTRONICS	Relay
F	M12 connector (Male) made by Phoenix Contact	Relay/ Waterproofing

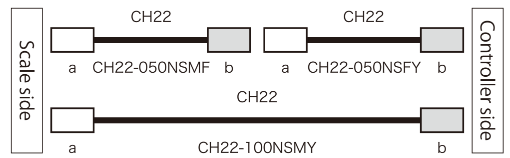

CH22-050NSMF
example)
Cable length 5m
Without conduit
PU sheath
Scale side connector
Original of Magnescale
Controller side connector
M12 (male) made by Phoenix Contact

CH22-100NSMY
example)
Cable length 10m
Without conduit
PU sheath
Scale side connector
Original of Magnescale
Controller side connector
RJ45 by YAMAICHI ELECTRONICS

CH22-050NSFY
example)
Cable length 5m
Without conduit
PU sheath
Scale side connector
M12 (Female)
Controller side connector
RJ45 made by YAMAICHI ELECTRONICS

CH23 - □□□○▽※#
CH23A- □□□○▽※#
(CH23A : FANUC model only)

[□□□]
Cable length
(Example)

Type	Cable length
010	1m
005	0.5m
065	6.5m
100	10m

[○]Conduit specification

Type	Conduit specification
C	With conduit(standard)
N	Without conduit

[▽]Cable sheath

Type	Cable specification
V	PVC(Φ6.8)[Scale side]
C	PU(Φ6.8)[Scale side]
P	PVC(Φ8)[Controller side]
E	PU(Φ8)[Controller side]

[※]Controller side connector

Type		Specification	Remarks
Without	With	Earth wire	
Z	-	Open-end	Scale side connector should be 10P JN2 (Female) made by Japan Aviation Electronics Industry or 2P made by TAJIMI ELECTRONICS
None	-	Open-end	Standard
M	-	10P made by Sumitomo 3M	Mitsubishi NC, J3 (ABS)
F	-	20P straight case made by Honda Tsushin Kogyo	FANUC (ABS)
J	-	Horizontal drawing case made by HIROSE Electric	FANUC (ABS)
K	-	10P JN1 (Male) made by Japan Aviation Electronics Industry	Relay
N	-	12P R04 (Male) made by TAJIMI ELECTRONICS	Relay (fixed)

[#]Scale side connector

Type	Specification	Remarks
None	Original of Magnescale	Standard
A	10P JN2 (Female) made by Japan Aviation Electronics Industry	Relay
C	12P R04-9125JF8.5 made by TAJIMI ELECTRONICS	Relay (fixed)

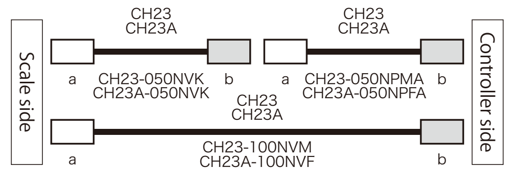

CH23-050NVK
CH23A-050NVK
example)
Cable length 5m
Without conduit
PVC sheath
Scale side connector
Original of Magnescale
Controller side connector
10P JN1 (male) made by Japan Aviation Electronics Industry

CH23-100NVM
CH23A-100NVF
example)
Cable length 10m
Without conduit
PVC sheath
Scale side connector
Original of Magnescale
Controller side connector
<CH23> 10P made by Sumitomo 3M
<CH23A> 20P made by Honda Tsushin Kogyo

CH23-050NPMA
CH23A-050NPFA
example)
Cable length 5m
Without conduit
PVC sheath
Scale side connector
10P JN2 (Female) made by Japan Aviation Electronics Industry
Controller side connector
<CH23> 10P made by Sumitomo 3M
<CH23A> 20P made by Honda Tsushin Kogyo